Layne Bowler

the Taste Engineering

INSTALLATION, OPERATION AND MAINTENANCE MANUAL

Dear Customer,

We thank you for choosing our Verti Line brand Layne Bowler VTP Vertical Turbine Lineshaft Pump. Your pump was designed by a group of qualified engineers and manufactured by experienced technicians, who are always using the latest technology of computerized and numerically controlled machines and machine tools. Layne Bowler Pump Company was one of the pioneers, which have taken EN ISO 9001 Quality Management System Certificate in Turkey.

Layne Bowler has a great history, which can be traced back to 1882, when the inventor, Mr. Mahlon Layne drilled his first well and found himself in need to a different pump to get the water from his drilled well. He understood that the pump, which he should invent, must be different from all the existing pumps of that time.

In 1903 Mr. M. Layne and the entrepreneur Mr. P.D Bowler joined in a manufacturing venture called Layne / Bowler, which had spread from the Mississippi basin to all over the world. In 1965, Layne Bowler Company Inc. was established in Ankara, where the innovations and the engineering studies never stop. In addition to the innovation of the existing pumps, Layne Bowler is always working on introducing new pump ranges and categories. Hoping that, Layne Bowler products would play a positive role in helping the constantly growing world population who is relying on a very small amount of fresh water to survive. People are in need to Layne Bowler pumps, in order to get the fresh water from underground and sometimes to get rid off waste water problems.

THIS "INSTALLATION, OPERATION AND MAINTENANCE MANUAL" MUST BE CAREFULLY READ before starting the porcess. Please note that correct installation and good maintenance extends the working life of your pump and make you satisfied at utmost point.

If this Verti Line pump is installed according to this given manual and is operated in its appropriate performance range, you will start tasting the engineering of Layne Bowler Pumps from its high performance, high efficiency and long operation life.

NOTE: Installation of electrical equipments, electrical connections and first drive need special knowledge so it must be done by experienced electrician.

We recommend you to keep fast moving spare parts always ready in your stocks.
NOTE: We, as Layne Bowler, hereby confirm that the availability of the spare parts for this pump is guaranteed for 10 years.

Finally, if there is any doubt or question during the process of installation or operation, please do not hesitate to contact the factory directly or the nearest Layne Bowler representative in your area.

LAYNE BOWLER
Pumps Company Inc.
After Sales Department
PK: 3
06930 Etimesgut – ANKARA
TURKEY
Telephone : +90 312 255 96 51
Fax : +90 312 255 96 50
Web page : www.laynebowler.com.tr
e-mail : aftersales@laynebowler.com.tr

TABLE of CONTENTS

INTRODUCTION

NOTE: The information in this manual intends to be used as a guide only. If you hava a problem, contackt your Layne Bowler Pump Inc. For detail information about your pump.

The design, material, and workmanship incorporated in the construction of Layne Bowler Pumps makes them capable of giving long, trouble free service. The life and satisfactory service of any mechanical unit, however, is enhanced and extended by correct application, proper installation, periodic inspection and careful maintenance. This instruction manual was prepared to assist operators in understanding the construction and the correct methods of installing, operating and maintaining these pumps.

WARNING ***Rotating components of the pump assembly must be covered with a suitable rigid guard to prevent injury to personnel.***

Study thoroughly and carefully follow the instructions for installing and operating. For questions on trouble shooting and maintenance, see the "Preventive Maintenance" Section. Keep this instruction manual handy for reference.

CAUTION ***Layne Bowler Pumps will not be liable for any damages or delay caused by failure to comply with the provisions of this instruction manual.***

RECEIVING AND CHECKING

The pump should be carefully supported prior to unloading from the carrier. Handle all components carefully. Inspection for damage of the shipping crate should be made prior to unpacking the pump. After unpacking, visually inspect the pump and check the following:

1. Contents of the pump assembly against the packing list.
2. All components against damage.
3. All shafting for damage, should the crate be broken or show careless handling.

Any shortages or damages should be immediately called to the attention of the local freight agent of the carrier by which the shipment arrived and proper notation made on the bill. This will prevent any controversy when claim is made and facilitate prompt and satisfactory adjustment.

MATERIALS AND EQUIPMENT REQUIRED

The material and equipment necessary for installation of the pump will vary with the size of the pump and the type of installation. The following list of standard tools and supplies is offered only as a guide.

RIGGING EQUIPMENT
• Mobile power hoist, traveling crane or derrick.
• Drag line and blocks.
• Elevator clamps, if unit is unassembled.
• Clevises – for use with eyebolts.
• Timbers – size, length, and quantity to support long pump parts on the floor.
• I-Beams or timbers to support pump over installation.

HAND TOOLS
• Pipe wrenches.
• Set of mechanics tools including: files, wire brush, pliers, wire cutters and pocket knife.
• Clean rags.

STORAGE

Layne Bowler Pumps carefully preserves and protects its products for shipment. However, the effective life of the preservatives applied at the factory can vary from 3 to 18 months depending on the severity of the environment in which the equipment is stored. This section provides procedures for preparation prior to storage and maintenance during storage of Layne Bowler Pumps. These procedures are necessary to protect the precision parts of the pumps.

Specific procedures for storing motors, gearheads, and engines, should be obtained from the equipment manufacturer. This section is intended to be of general assistance to users of Layne Bowler VTP Pumps. It shall not modify, amend and/or otherwise alter the scope of Layne Bowler VTP Pumps warranty responsibilities to the purchaser in any way whatsoever.

Storage Preparation

Layne Bowler Pumps require proper preparation for storage and regular maintenance during storage. The pump shall be considered in storage when it has been delivered to the job site and is awaiting installation.
Preferably, the storage area shall be paved, well drained and free from flooding, and be indoors whenever possible.
Weatherproof coverings used for outdoor storage shall be flame resistant type sheeting or tarpaulins. They shall be placed so as to provide good drainage and air circulation and shall be tied down to protect from wind damage.
Storage area shall be maintained in a clean condition at all times.
Pumps and/or component parts shall be placed on skids, pallets, or shoring to permit good air circulation.
Pumps and/or component parts shall be sorted so as to permit ready access for inspection and/or maintenance without excessive handling.
Pumps and/or component parts stacked during storage shall be arranged so that the racks, containers, or crates bear full weight without distortion of pumps or parts.
Identification markings must be readily visible. Any cover removed for internal access shall be replaced immediately.
Pump and bowl assembly shafting shall be rotated counter clockwise, as a minimum, once a month. Shaft shall not be left in the same previous position, nor in the extreme raised or lowered lateral position. Shaft should rotate freely.

NOTE: For further information on these procedures, contact your Layne Bowler Pumps representative.

Recommended Storage Procedures

Controlled storage facilities should be maintained at an even temperature 10º F (6º C) or more **above the dew point** with relative humidity less than 50% and little or no dust. (If these requirements can not be met the pump is to be considered in uncontrolled storage.)
For uncontrolled storage periods of 6 months or less, the pump is to be inspected periodically to insure that all preservatives are intact.
All pipe threads and flanged pipe covers are to be sealed with tape.
The pump must not be stored closer than six inches (15 cm) from the ground.

Uncontrolled Long Term Storage Preparations

When applicable to the pump, storage periods over six months require the preceding storage procedure and storage preparation plus the following:
Inspect the lube oil piping and either fill the piping with rust preventative oil, or re-coat the piping periodically to prevent corrosion.
Place 10 pounds (4.5 kg) of moisture absorbing desiccant or 5 pounds (2.3 kg) of vapor phase inhibitor crystals near the center of the pump. If the pump is assembled, place an additional one pound (0.5 kg) in the discharge nozzle securely fastened to the discharge elbow.
Install a moisture indicator near the perimeter of the pump. Cover the pump with 6 mil. (0.15 mm) minimum thickness black polyethylene or equal and seal it with tape. Provide a small ventilation hole approximately ½ inch (12 mm) diameter.
Provide a roof or shed shelter to protect from direct exposure to the elements.

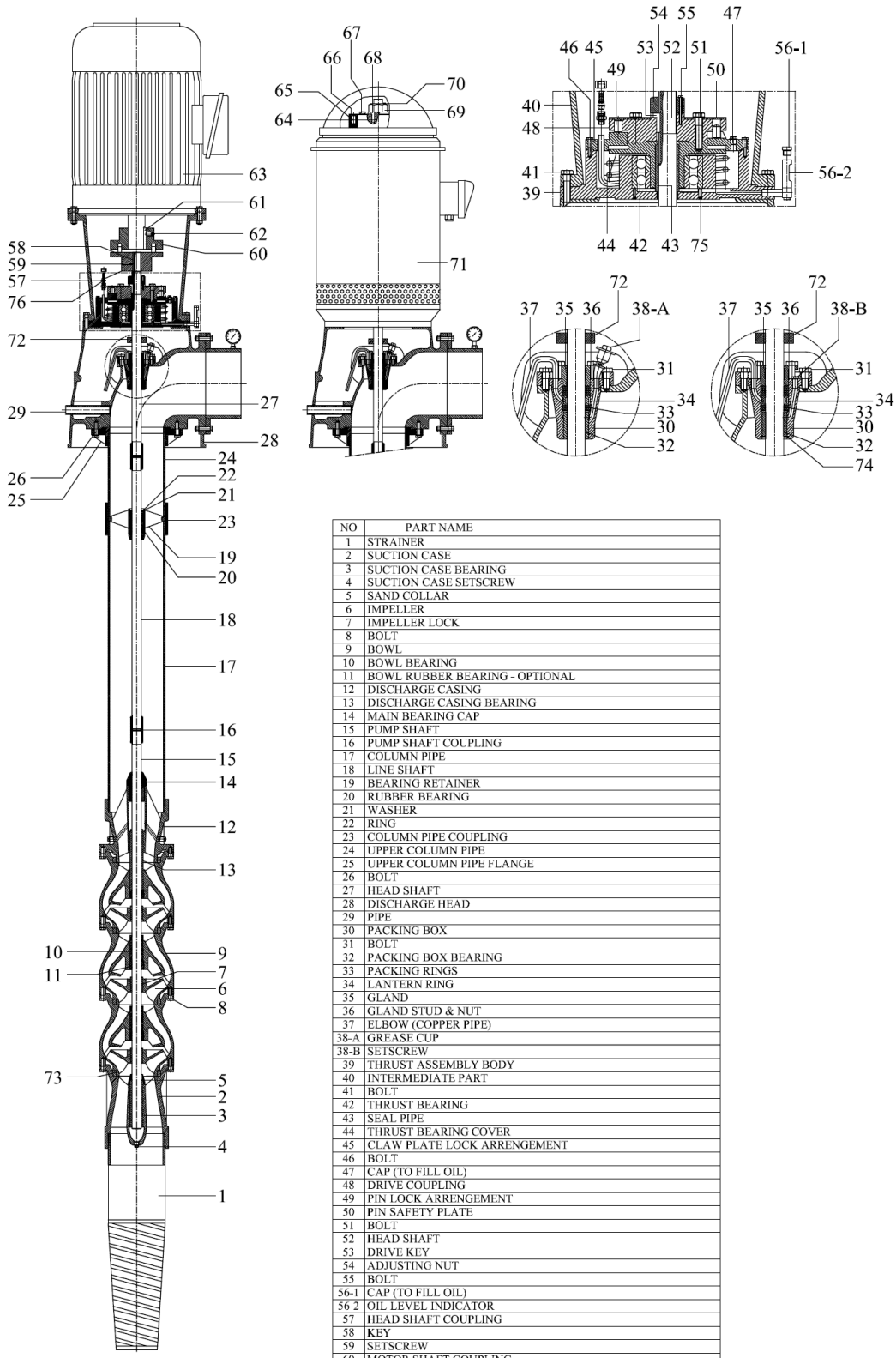

NO	PART NAME
1	STRAINER
2	SUCTION CASE
3	SUCTION CASE BEARING
4	SUCTION CASE SETSCREW
5	SAND COLLAR
6	IMPELLER
7	IMPELLER LOCK
8	BOLT
9	BOWL
10	BOWL BEARING
11	BOWL RUBBER BEARING - OPTIONAL
12	DISCHARGE CASING
13	DISCHARGE CASING BEARING
14	MAIN BEARING CAP
15	PUMP SHAFT
16	PUMP SHAFT COUPLING
17	COLUMN PIPE
18	LINE SHAFT
19	BEARING RETAINER
20	RUBBER BEARING
21	WASHER
22	RING
23	COLUMN PIPE COUPLING
24	UPPER COLUMN PIPE
25	UPPER COLUMN PIPE FLANGE
26	BOLT
27	HEAD SHAFT
28	DISCHARGE HEAD
29	PIPE
30	PACKING BOX
31	BOLT
32	PACKING BOX BEARING
33	PACKING RINGS
34	LANTERN RING
35	GLAND
36	GLAND STUD & NUT
37	ELBOW (COPPER PIPE)
38-A	GREASE CUP
38-B	SETSCREW
39	THRUST ASSEMBLY BODY
40	INTERMEDIATE PART
41	BOLT
42	THRUST BEARING
43	SEAL PIPE
44	THRUST BEARING COVER
45	CLAW PLATE LOCK ARRENGEMENT
46	BOLT
47	CAP (TO FILL OIL)
48	DRIVE COUPLING
49	PIN LOCK ARRENGEMENT
50	PIN SAFETY PLATE
51	BOLT
52	HEAD SHAFT
53	DRIVE KEY
54	ADJUSTING NUT
55	BOLT
56-1	CAP (TO FILL OIL)
56-2	OIL LEVEL INDICATOR
57	HEAD SHAFT COUPLING
58	KEY
59	SETSCREW
60	MOTOR SHAFT COUPLING
61	KEY
62	SETSCREW
63	VSS MOTOR
64	DRIVE COUPLING
65	PIN LOCK ARRENGEMENT
66	PIN SAFETY PLATE
67	BOLT
68	DRIVE KEY
69	ADJUSTING NUT
70	NUT
71	VHS MOTOR
72	WATER SPLITTER
73	WEAR RING (OPTINAL)
74	LOCK RING
75	BEARING REMOVING SETSCREWS
76	COOLING PIPE (OPTINAL)

Figure 1 : Open Lineshaft Pump

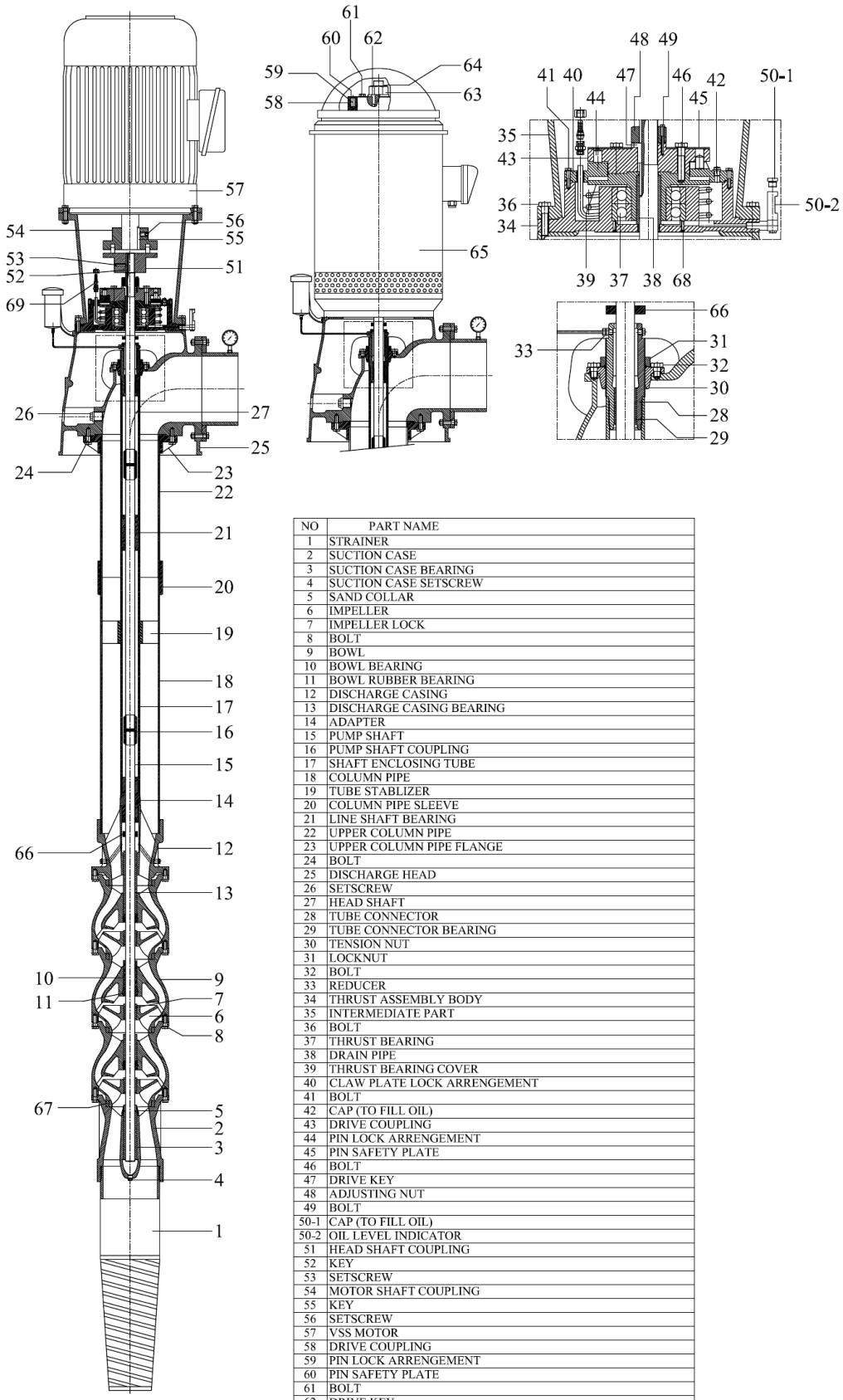

NO	PART NAME
1	STRAINER
2	SUCTION CASE
3	SUCTION CASE BEARING
4	SUCTION CASE SETSCREW
5	SAND COLLAR
6	IMPELLER
7	IMPELLER LOCK
8	BOLT
9	BOWL
10	BOWL BEARING
11	BOWL RUBBER BEARING
12	DISCHARGE CASING
13	DISCHARGE CASING BEARING
14	ADAPTER
15	PUMP SHAFT
16	PUMP SHAFT COUPLING
17	SHAFT ENCLOSING TUBE
18	COLUMN PIPE
19	TUBE STABLIZER
20	COLUMN PIPE SLEEVE
21	LINE SHAFT BEARING
22	UPPER COLUMN PIPE
23	UPPER COLUMN PIPE FLANGE
24	BOLT
25	DISCHARGE HEAD
26	SETSCREW
27	HEAD SHAFT
28	TUBE CONNECTOR
29	TUBE CONNECTOR BEARING
30	TENSION NUT
31	LOCKNUT
32	BOLT
33	REDUCER
34	THRUST ASSEMBLY BODY
35	INTERMEDIATE PART
36	BOLT
37	THRUST BEARING
38	DRAIN PIPE
39	THRUST BEARING COVER
40	CLAW PLATE LOCK ARRENGEMENT
41	BOLT
42	CAP (TO FILL OIL)
43	DRIVE COUPLING
44	PIN LOCK ARRENGEMENT
45	PIN SAFETY PLATE
46	BOLT
47	DRIVE KEY
48	ADJUSTING NUT
49	BOLT
50-1	CAP (TO FILL OIL)
50-2	OIL LEVEL INDICATOR
51	HEAD SHAFT COUPLING
52	KEY
53	SETSCREW
54	MOTOR SHAFT COUPLING
55	KEY
56	SETSCREW
57	VSS MOTOR
58	DRIVE COUPLING
59	PIN LOCK ARRENGEMENT
60	PIN SAFETY PLATE
61	BOLT
62	DRIVE KEY
63	ADJUSTING NUT
64	BOLT
65	VHS MOTOR
66	WATER SPLITTER
67	WEAR RING (OPTINAL)
68	BEARING REMOVING SETSCREWS
69	COOLING PIPE (OPTINAL)

Figure 2 : Enclosed Lineshaft Pumps

GENERAL DESCRIPTION

The model VTP pump is a vertical turbine lineshaft pump, which is designed to meet wide ranges of service with maximum dependability. See Figure 1 for open lineshaft pump and Figure 2 for enclosed lineshaft pump with VHS and VSS motors.

Drivers
Solid or Hollow shaft motors (VHS or VSS), right angle gear drives or belts, are often used with a separate head shaft through the driver and connected to the pump by a threaded or keyed couplings.

Discharge Head
The discharge head is either a cast iron head or a steel construction type head. Ports are provided for connecting the pressure gauge, stuffing box bypass return and lubricator connections. The driver support portion of the discharge head is designed with large windows for easy stuffing box or tension plate adjustment. The windows are covered with coupling guards for safe operation.

Column
Threaded or flanged column construction provides positive shaft and bearing alignment. Bearings are spaced to provide vibration free operation below the shaft. This will insure long bearing life and reduced shaft wear. For open lineshaft, the shaft is supported within the column by using bearing retainers in the column assembly. For enclosed lineshaft, the bearings are also the tube couplings of the shaft-enclosing tube. The shaft enclosing tube is stabilized in the column pipe by tube
stabilizer.

Bowl Assembly
The bowls are generally of flanged construction for accurate alignment and ease of assembly and disassembly. Impellers may be either open or enclosed depending on the design requirements. They are fastened to the pump shaft by impeller lock collets. For temperatures over 180º F (82º C) and in the larger size bowls (over 18”), impellers are keyed to the shaft.

WELL CONDITIONS

When the VTP pump is to be installed in a well, consideration must be given to the well before installation. Check the inside diameter of the well and the maximum outside diameter of the bowl and column assemblies to determine that there is adequate clearance to install the pump assembly in the well casing. Also insure that the well is deep enough to receive the full length of pump.

1. The VTP pump unit must be operated in a straight portion of the well.

CAUTION ***Installing a unit in a crooked well may bind and distort the pump column with potential resulting malfunction.***

2. When the straightness of the well is not known, the well should be “gauged” prior to installation by lowering a dummy assembly, slightly longer and larger diameter than the bowl assembly. Gauging is also important when a stepped well casing is used, with the lower part of the well casing having small inside diameter.

3. The well should be developed with a test pump prior to installing the permanent pump. Test pumping the well serves several purposes. It removes the excess sand encountered during the initial pumping of the well. Pumping sand or other abrasives with a VTP pump will shorten the life of the pump and can void the warranty.

4. The test pumping also provides a means of determining the capacity and drawdown. The well capacity should equal or exceed the pump capacity.

If the pump removes water at a higher rate than the well produces, the drawdown will be excessive and the pump will cavitate or ‘starve’ resulting in damage to the pump.

5. The pump must be equipped with enough column pipe to assure that the bowl assembly remains submerged during operation.

FOUNDATION AND PIPING

BASE PLATE INSPECTION
Sub base and sole plate are terms in common use to describe a general class of solid steel plates mounted in grout (or bolted to steel structures) at the pumpfoundation interface.
1. Remove the sub base from the pump discharge head, when shipped assembled.
2. Completely clean the underside of the sub base. It is sometimes necessary to coat the underside of the sub base with an epoxy primer. (This is available as an option.)
3. Remove the rust preventative solution from the machined topside with an appropriate solution.

SITE WITH CONCRETE FOUNDATION
1. A pump should have adequate space for operation, maintenance and inspection.
2. Sub base mounted pumps are normally grouted on a concrete foundation, which has been poured on a solid footing. The foundation must be able to absorb any vibration and to form a permanent, rigid support for the pumping unit.
3. The foundation must be of adequate strength to support the complete weight of the pump, plus the weight of the liquid passing through it.

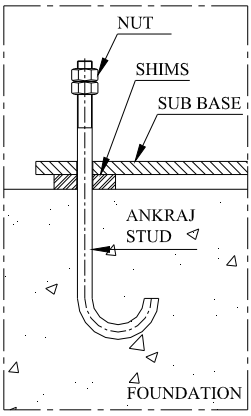

Figure 3

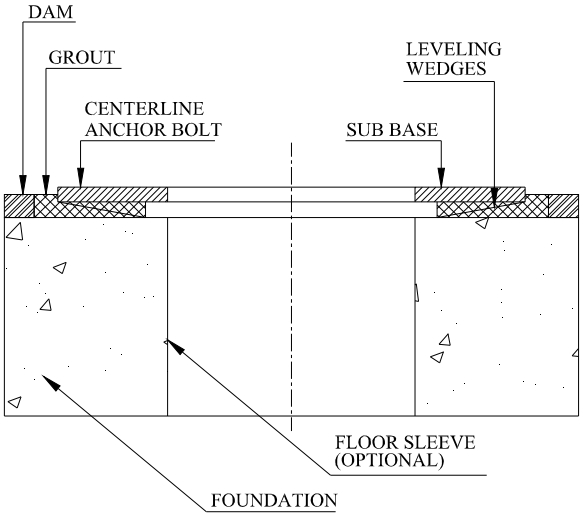

Figure 4

Bolts should be sized and located in accordance with the dimensions given on the Pump Certified Outline Drawing, if provided. The pipe sleeve allows movement for the final positioning of the foundation bolts to conform to the holes in the base plate. See Figure 3.

4. Remove water and/or debris from anchor bolt holes/sleeves prior to grouting. If the sleeve type bolts are being used, fill the sleeves with packing or rags to prevent grout from entering.

5. Carefully lower the sub base onto the foundation bolts. Hand tightens the nuts.

6. Leveling the sub base may be done by several methods. Two common methods are:

A. Using leveling the wedges. This is shown in Figure 4.

B. Leveling nuts on the anchor bolts.

Regardless of the method, a machinist level must be used for leveling.

NOTE: When using a machinist level, it is important that the surface being leveled is free of all contaminants, such as dust, to ensure an accurate reading.

7. Level the sub base in two directions at 90 degrees on the machined surface. The levelness tolerance is 0.005 inches per foot for commercial, and 0.001 inches per foot for API.

BASE PLATE GROUTING

1. Inspect foundation for dust, dirt, oil, chips, water, etc. and remove any contaminants. Do not use oilbased cleaners as grout will not bond to it. Refer to grout manufacturer's instructions.

2. Build dam around foundation (See Figure 4). Thoroughly wet foundation.

3. Pour grout between sub base and concrete foundation, up to level of dam. Remove air bubbles from grout as it is poured by puddling, using a vibrator, or pumping the grout into place. Nonshrink grout is recommended.

4. Allow grout to set at least 48 hours.

5. Tighten foundation bolts.

PIPING

Guidelines for piping are given in the "Hydraulic Institute Standards", available from: Hydraulic Institute, 9 Sylvan Way, Parsippany, NJ 07054-3802 and must be reviewed prior to pump installation.

WARNING ***Never draw piping into place by forcing the flange connections of the pump. Pipe strain will adversely effect the operation of the pump resulting in damaging the equipment and possible physical injury.***

1. All piping must be supported independently of, and line up naturally with the pump flange so that undue pipe strain is not imposed on the pump.

2. **DO NOT** connect piping to pump until grout has hardened and pump hold-down bolts have been tightened.

3. It is suggested that expansion loops or joints, if used, be properly installed in discharge line. When handling liquids at elevated temperatures expansion joints are used, so linear expansion of piping will not draw pumps out of alignment.

4. Carefully clean all pipe parts, valves and fittings, and pump branches prior to assembly.

5. Isolation and check valves should be installed in discharge line. Locate the check valve between isolation valve and pump, this will permit inspection of the check valve. The isolation valve is required for regulation of flow, and for inspection and maintenance of pump. The check valve prevents pump or seal damage due to reverse flow through the pump when the driver is turned off.

6. Diffusers or increasers, if used, should be placed between pump and check valves.

7. Cushioning devices should be used to protect the pump from surges and water hammer if quickclosing valves are installed in the system.

INSTALLING THE BOWL ASSEMBLY

WARNING ***Do not work under a heavy suspended object unless there is positive support and safe guards, which will protect personnel, should a hoist or sling fail.***

CAUTION ***Do not attempt to lift bowl assembly by the pump shaft. This can result in damaging the pump shaft.***

1. Prior to installing the bowl assembly, check that all capscrews are tight. Turn the pump shaft by hand and make sure it turns freely. Remove all accumulated dust, oil or other foreign material from the external surfaces.

2. If pump setting exceeds 200 ft., measure the available bowl assembly lateral (shaft end play) by pushing shaft toward suction bowl, mark shaft, pull shaft out and mark again. Measure the distance between the marks and record. This will later aid in adjusting the final impeller position.

For pump setting over 200 ft. this measure must complete before proceeding.

Place two I-beam supports across the base plate opening, strong enough to safely support the weight of the entire pump assembly. These I-beams should be connected by threaded rods and nuts so as to clamp them firmly together for the portion to be supported. (See Figure 5).

4. Place a suitable hoist or derrick over base plate opening with the hook in the center.

5. If a suction strainer is provided, assemble it to the suction bowl or to the end of suction pipe (if provided).

6. Install suction pipe, if provided. Place an elevator clamp just below the pipe threads. Attach a sling to the clamp and to hoist hook. Hoist over the well. Lower the suction pipe until clamp rests firmly on the supporting timbers.

7. Place the elevator clamps just below the discharge bowl. For flanged discharge, install two threaded eye bolts through bolt holes in the flange 180º apart.

8. Attach sling to elevator clamps or eye bolts and hoist into position over foundation opening (See Figure 5).

9. If suction pipe is provided, lower the bowl assembly until the bottom end of the suction bowl meets the top end of the suction pipe. Screw the bowl assembly onto the suction pipe.

10. Carefully lower bowl assembly, guiding the unit so it does not strike the sides of the opening. Continue to lower bowl assembly until the elevator clamps or discharge bowl flange rests firmly on the I-beam supports.

11. Place a cover over the discharge bowl opening to prevent entrance of dirt or other foreign matter until ready for installation of the column assembly.

CAUTION ***Do not drop any foreign object into the bowl assembly. Such an object can cause serious damage to the pump and any downstream components. Any foreign object dropped into the bowl assembly must be retrieved prior to continuing assembly.***

INSTALLING THE COLUMN

OPEN LINESHAFT

Both lineshafts and column pipes are coupled with threaded couplings. When provided, see the Certified Pump Outline Drawing for the number of column and shaft sections required. The top and bottom sections may be special lengths:

1. Check the lineshaft for straightness. Average total runout should be less than 0.0005” TIR per foot, not to exceed 0.005” T.I.R. for every 10 feet of shafting.

2. Hoist the first piece of lineshaft over the bowl assembly. Lower the lineshaft until the bottom end is properly aligned with the coupling of the pump shaft. Apply a thin film of oil to the threads on the lineshaft and the coupling.

3. With lineshaft in the proper position on the coupling, screw lineshaft into the coupling manually until resistance is felt. A fine wire inserted in the hole at the center of the coupling can be used as a gage to determine when the coupling is correctly positioned on the shaft. Remove the wire after installing the coupling. Completely tighten the joint by using a pair of pipe wrenches. Use care not to damage any bearing journal areas on the shaft.

CAUTION ***Make up threaded joints manually to verify that the threads are properly engaged prior to applying a wrench. If cross-threading occurs, break the joint and repair the threads. If the threads are beyond repair, replace the damaged part.***

4. For threaded column, secure a friction clamp immediately below the column coupling. Hoist column section over bowl assembly. Lower column over lineshaft until column pipe engages the discharge bowl. Manually screw the column into discharge bowl. Complete joint by tightening column with chain tongs until the end of the column butts firmly against discharge bowl.

5. For flanged column, install two eyebolts diametrically opposite the upper flange of the bottom column. Attach a sling to the eyebolts and to the hoist hook. Lower column section until the flange engages the flanged top bowl register. Insert as many bolts through both flanges as possible. Lift column assembly high enough to allow rotation of

the supports. Install and tighten remaining capscrews gradually in diametrically opposite pairs until all are uniformly tightened.

6. Lift the assembly and remove the elevator clamp or supports and slowly lower the bowl and the column assembly. Place supports on the base plate and continue to lower the assembly until the column elevator clamps or column flange comes to rest on the supports. Place an elevator clamp under the column pipe and allow it to butt firmly against the column pipe coupling.

7. Place the bearing retainer over the shaft and locate it in the column coupling recess. Make sure the end faces of the column pipe are clean. For flanged columns, fit the retainer in the female register of the flange. Make sure the contact faces in the flanges are clean.

8. Check that the shaft is approximately centered in the bearing. Move the shaft around slightly so as to center it in its bearing. Only a slight amount of force should be required. If an excessive amount of force is required, the pipe or shaft may not be butted properly or the shaft may be bent. In any case, the problem must be corrected prior to proceeding further.

9. Repeat the preceding procedures until all column sections required have been installed.

10. Install the head shaft or top shaft and coupling.

CAUTION ***Do not drop any foreign object into the column assembly. Such an object can cause serious damage to the pump and any downstream components. Any foreign object dropped into the column assembly must be retrieved prior to continuing assembly.***

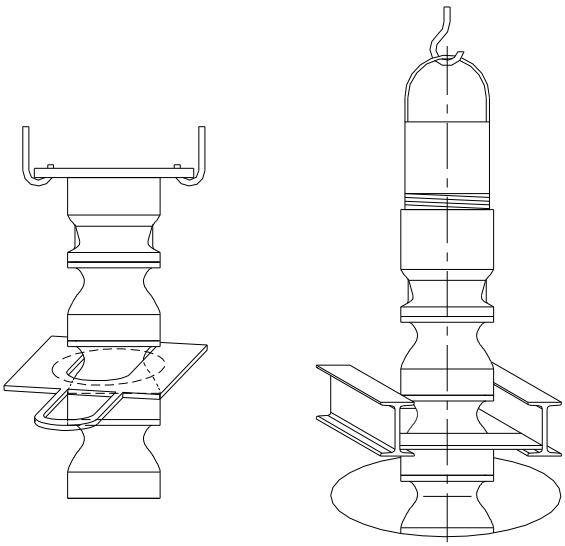

Figure 5

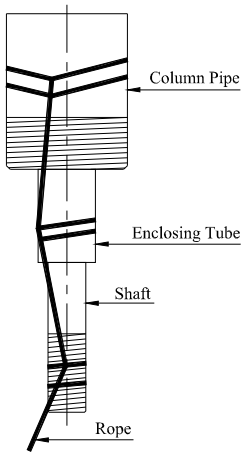

Figure 6

ENCLOSED LINESHAFT

1. Insert tube and shaft sections into column section.

2. Place an elevator clamp near top of column just below and butt firmly against column pipe coupling. For flanged columns, place the elevator clamp just below the flange.

3. Attach a sling to hoist hook. Attach bottom of shaft to column, by tying a tail rope to deepthroated clamp attached to bottom of column. (See Figure 6). Figure 6 also shows an altrenmative method.

4. Utilize the remaining tail rope to keep tension on the knots during hoisting. Lower end of column section shall be guided by a drag line which is pulled by the hoist. A traveling block for the dragline shall be attached to a deep-throated clamp, which is secured to bottom of the column threads.

5. Hoist column section over pump, keeping tension on tail rope. With column in a vertical position, remove drag-line and traveling block, lower column until bottom line shaft is properly aligned with pump shaft coupling.

6. Apply a thin film of oil to the threads on the lineshaft and the coupling.

7. With lineshaft in proper position on the coupling, remove tail rope and screw lineshaft into coupling until resistance is felt. A fine wire inserted in the hole at the center of the coupling can be used as a gage to determine when the coupling is correctly positioned on the shaft. Remove the wire after installing the coupling. Complete tightening the joint by using a pair of pipe wrenches. Use care not to damage any bearing journal areas of the shaft.

NOTE: Shaft threads are left-handed. Make up threaded joints manually to verify that the threads are properly engaged prior to applying a wrench. If cross-threading occurs, break the joint and repair the threads. If the threads are beyond repair, replace the damaged part.

8. Carefully lower column section until lower end of the tube section rests on the adapter bearing. The end faces of the tube should be clean and free of nicks. Remove tail rope, clean outside of the adapter bearing and lubricate with thread compound. Screw tube section onto adapter bushing manually, until resistance is felt. Complete tube joint by utilizing a pair of pipe wrenches or chain tongs, butting the end of tube against the upper end of the tube adapter bearing.

9. Clean column threads and lubricate with thread compound.

10. Lower column until column pipe engages in the discharge bowl. Manually thread the column into discharge bowl. Complete joint by tightening column, utilizing chain tongs until the end of the column butts firmly against discharge bowl.

11. Lift the pump assembly and remove elevator clamp secured to discharge bowl. Slowly lower assembly into well or sump until elevator clamp gently comes to rest on timbers or I-beam supports and remove the sling.

12. Remove the exposed lineshaft bearing, pour oil into the tubing (SAE 30) and reinstall the bearing.

13. Repeat the preceding procedures. Throughout the column assembly, install tube stabilizer over the enclosing tube min. every 40 ft. The last one should be less than 40 ft below the discharge head. Use soapy water as lubricant when sliding the stabilizer over the tube.

14. Continue the procedure until all column sections for the proper setting have been installed.

15. Install the head shaft or top shaft and coupling.

⚠ CAUTION ***Do not drop any foreign object into the column assembly. Such an object can cause serious damage to the pump and any downstream components. Any foreign object dropped into the column assembly must be retrieved prior to continuing assembly. Fill the shaft enclsing tube after all sections before installing the next lineshaft bearing.***

INSTALLING THE DISCHARGE HEAD

VTP Pumps are provided with either a cast iron or steel construction type head. Install the discharge head as follows:

1. If the stuffing box (See Figure 7-1 or 7-2) or tension nut (See Figure 8) is assembled to the head, remove it and all the attached piping.

2. For threaded column, check to be sure that the column flanged is securely attached to the bottom of the discharge head. Check and tighten the capscrews (or socket head screw) gradually in diametrically opposite pairs.

3. Remove coupling guard if provided. Attach a sling to the lifting lugs on the side of the discharge head through windows and hoist discharge head over the protruding top shaft (or stub shaft).

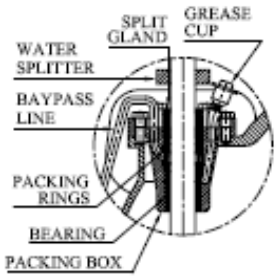

Figure 7-1

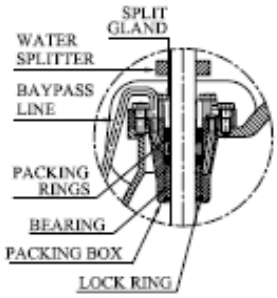

Figure 7-2

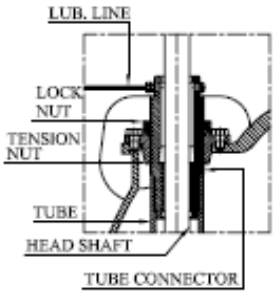

Figure 8

CAUTION ***Do not bump or scrape the shaft protruding above the column. This could result in bending or damaging the shaft.***

4. Orient the discharge head in the required position and lower the head. Centering the vertical hole with the top shaft protruding above the column.For threaded column, continue to lower the discharge head until the large threaded hole in the bottom of the discharge head rests squarely on top of column. Clean the threads at upper end of column assembly and lubricate with thread compound. Rotate discharge head, screw it onto the column, for short set-pump, butting the top of column tightly against the discharge head.

5. For flanged column, continue to lower the discharge head until the discharge head engages the column. Install capscrews and secure discharge head to the column flange. Tighten capscrews gradually in diametrically opposite pairs. Lift pump assembly high enough to allow rotation of the supports. Realign and lower assembly. Install and tighten remaining capscrews. Repeat the rotating and the tightening procedure until all capscrews are uniformly tight.

6. Hoist the discharge head by lifting lug and remove the elevator clamp attached to column.

7. Remove the support timbers or I-beams and clean the top of foundation or base plate. Orient the discharge head in the required position.

NOTE: Sling should be rated to handle in excess of the pump weight.

8. Lower bowl, column and head assembly, until discharge head mounting flange engages base plate. Secure discharge head to the foundation or base plate. Check the levelness of the discharge head in all directions, utilizing a machinist level across the driver's mounting surface of the discharge head.

9. Check whether the top shaft (or stub shaft) is in the center of the stuffing box bore. If not, the shaft must be centered by shimming the head base and the sub base (or the foundation).

10. Rotate the shaft approximately 90 degree. Check again whether the shaft is at the center of the stuffing box bore or not. If not, either the top shaft is bent or the first shaft below it did not butt properly. Correction must be made before the installation procedures can proceeds.

INSTALLING THE STUFFING BOX

Assemble stuffing box as shown in Figure 7-1 and 7-2. (two types refers to grease lubrication and self lube teflon application). Mechanical seal application is possible for this installation use the guides sent as specially for this purpose.

1. Clean the surface of the discharge head where the stuffing box will be mounted and remove any nicks or burrs with a fine flat file. Position gasket on surface. Slide stuffing box down over headshaft and into position on the gasket. Secure stuffing box with capscrews.

2. Grease the packing ring for easier installation (if greased option).

3. Twist the packing ring sideways to get it around the shaft easily. Start the first ring into the stuffing box. When the entire ring is worked in using the fingers, tamp it down using a split wood bushing (or equal) and push the packing ring down firmly. It must seal on the shaft and bore of the stuffing box. Install all five (5) rings in this manner. Stagger ring joints 90 degrees apart. The split gland may be used as a tamper for the top ring.

4. Install the split gland and nuts on the split gland studs. Tighten nuts then relieve the nuts and tighten finger tight.

5. Final adjustment of the stuffing box must be made at pump start up.

CAUTION ***Check that the split gland is square in the stuffing box. Cocking can cause uneven compression of packing and damage to the shaft or sleeve and heat up the shaft and stuffing box.***

6. A properly packed stuffing box should be loose enough to allow the shaft to be turned manually.

CAUTION ***Do not over tighten packing, excessive wear can occur on the shaft or sleeve.***

7. Place the deflector ring or water splitter (72 – See the figures 1 and 7) through over the headshaft. It will be positioned over the stuffing box between the VHS motor or thrust assembly. In some thrust assembly applications, seal is fixed lower part of thrust assembly instead of this deflector.

INSTALLING THE TENSION ASSEMBLY

Assemble Tension Assembly as shown in Figure 9.
1. Remove the lock bolt and o-ring. Thoroughly clean the tension plate including the o-ring groove. Lightly grease the o-ring and reinstall it.

2. Clean the surface of the discharge head where the tension plate will be mounted and remove any nicks or burrs with a fine flat file. Carefully install the tension plate and gasket. Evenly tighten the mounting capscrews.

3. Pour one pint of recommended oil down the tube.

4. Clean the tension nut and lightly oil its bore and the threads. Screw the tension nut into the tube until the flange face of the nut contacts the tension plate.

5. Tighten the tension nut , back off the tension nut until a slot aligns with the locking bolt. Install the locking bolt.

6. Connect the lubrication line to the tension nut. Fill the oil container with the recommended oil. Check the lubricator feed and see that the oil is flowing freely.

INSTALLING THE DRIVER

INSTALLATION OF A HOLLOW SHAFT DRIVER
This refers to either VHS type electric motors or hollow shaft type gear drives. A short paragraph will be devoted to combination electric motor and right angle gear drives.

WARNING ***Do not work under a heavy suspended object unless there is a positive support and safe guards which will protect personnel should a hoist or sling fail.***

1. The driving mechanism of all hollow shaft driver is shown on Figure 10. The driveshaft extends up through the quill or hollow shaft of the driver and is held in place by an adjusting nut, which not only carries all the static and hydraulic thrust of the impellers and shaft but also provides the adjustment for the impeller clearances. The head shaft is connected to top shaft (or stub shaft) by a threaded coupling or a rigid flange coupling.

2. Motor stand. When a motor stand is furnished and not installed, proceed as follows:

A. Hoist the motor stand, inspect the mounting surfaces, register, and clean these surfaces thoroughly.
B. Install the motor stand on discharge head and secure with capscrews provided.

3. Attach a sling to the lifting lugs of driver and hoist the driver up. Inspect the mounting surface, register and clean these surfaces thoroughly. If any burrs are found, remove burrs with a smooth mill file, cleaning thoroughly afterward.

4. For motor, orient the motor conduit box in the required position. For the right angle gear, orient the input shaft to the desired position. Align the driver mounting holes with the mating tapped holes on the discharge head. Lower the driver until the registers engage and the driver rests on the discharge head. Secure driver with capscrews provided.

5. Lubricate the driver bearings in accordance with instructions given on lubrication plate attached to the driver case.

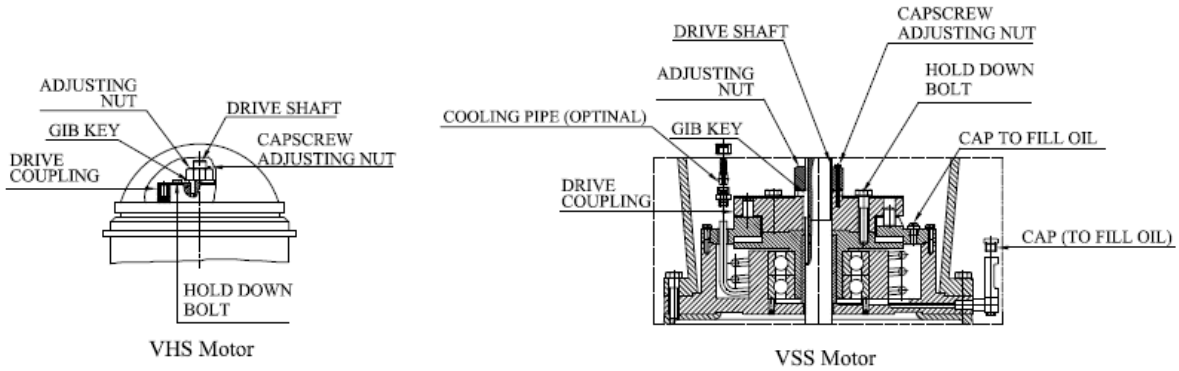

Figure 9

6. After lowering and orienting the driver as explained above, remove the drive coupling and the hold down bolts (See Figure 9 - left). **Be sure to mark the location of the coupling before remove it.**

7. Lower the head shaft through the motor quill shaft to meet the shaft coupling. Apply a thin film of oil to head shaft threads and screw into the shaft coupling (located above the stuffing box). Make sure the shaft is not damaged in any way. Tighten the joint.

8. Check that the head shaft centers inside the driver quill shaft within 0.06” (1.5 mm). If it does not, misalignment is indicated.

9. Any head shaft misalignment with driver quill shaft could be caused by a bent driveshaft, burrs, or foreign matter between shaft ends or any of the mounting flanges: motor flange to discharge head top flange, discharge head base flange to base plate or the base plate itself could be out of level. If the latter, shimming between it and discharge head base, will correct it. Also, check concentricity of motor to motor-stand (if provided) to discharge head.

10. With the motor in place and the head shaft projecting through the motor quill shaft, make temporary electrical connection to check the motor rotation. **(Be sure to remove the ratchet pins (or balls) before checking motor rotation.)** Motor must rotate counterclockwise when viewed from the top. See arrow on pump name plate. If motor does not rotate counterclockwise, you can change the rotation by interchanging any two leads. (For three phase only. For single phase motors see motor manufacturer’s instructions.)

CAUTION ***Never check motor rotation with the drive coupling in place. The bore clearance between the drive coupling and the pump shaft O.D. is so close that should the motor spin with this shaft stationary, galling and locking together is very likely to take place.***

11. Install motor drive coupling. (**Be sure to line up the match mark made at step 6.)** Inserting the ratchet pins if a non-reverse ratchet is used. Match the coupling lugs with corresponding holes in motor. Tighten hold down bolts evenly, making sure driver coupling is properly seated in the register fit.

12. Fit key into keyway, by filing if necessary, to where there is a snug but sliding fit. This key must be able to be removed by gentle leverage with a screwdriver under it.

13. Be careful that the key is not too high so as to hold up the adjusting nut from seating on the drive coupling. If it is, cut off some length of the key.

14. Install adjusting nut to hand tight.

INSTALLATION OF A SOLID SHAFT DRIVER

See the Figure 9 - right

1. For the vertical solid shaft motors a thrust asembly used over the discharge head to carry the axial loads. It has a bearing arrangement in itself.

2. Thrust assembly is shipped as ready to use. After the installation of the dicharge head, head shaft and stuffing box or tension tube assembly, it is placed over the discharge head. In some enviromental conditons, bearings in oil is needed to be extarnal cooling. Ask to the factory.

3. Thrust assembly has a similar drive coupling and keys, non-return mechanism etc. like hollow shaft motors on the top part.

4. Follow the same installation way as in the hollow shaft motors.

5. Place the motor coupling on the motor shaft, fixed it with screws.

6. After the installation of the thrust assembly, place the intermediate part over the thrust assembly. VSS motor wil be placed on the intermadiate part.

7. Place the head shaft coupling on the head shaft and screw it.

8. You can do the impeller adjustment through the adjustment nut at this stage. See the following instructions.

9. Place the motor over the intermediate part, fit the couplings to each other.

CAUTION **Check the oil level in the thrust asembly through the oil eye. SAE 30 series oil can be used. Volem of oil fillings can be seen in below table. It can be filled from the caps over the thrust assembly (in general) or over the oil level indicator (for 10AC types only).**

Thrust Assembly Types	Oil_Volume (~lt)
10AC	1
17AC types	1.5
20AC	2.5
Steel Constructions_Special	7-12

IMPELLER ADJUSTMENT FOR ALL MOTORS

HOLLOW SHAFT DRIVES

NOTE: Shaft adjustment up or down is accomplished by turning the adjusting nut Figure 9 - left.

NOTE: There are three or five holes in the adjusting nut and only four in the motor coupling. See Figures 10.

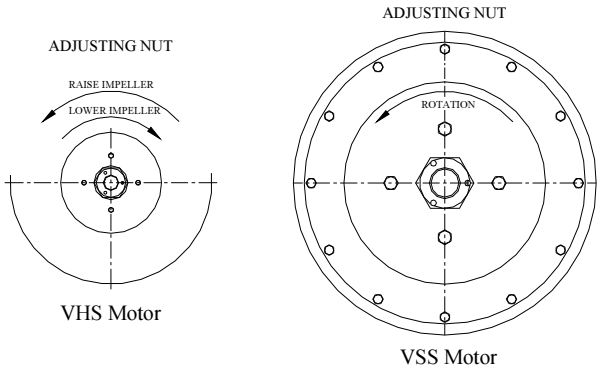

Figure 10

1. With shafting all the way down and the impellers resting on their seats, turn the adjusting nut in counterclockwise direction, thus lifting the shaft, until the impellers just clear their seats and the shaft/motor turns free by hand. This removes all deflection from the shaft.

2. For pump setting, continue to turn the adjusting nut until impellers reach the top of bowls (resistance is felt when impellers rub against the top of bowls.) The number of turns to reach the top of the bowl should equal the total lateral obtained during bowl assembly installation as recommended. If the lateral measured at the adjusting nut is less than that recorded previously, check the headshaft to make sure that the adjusting nut has not run out of threads and that the keyway is long enough. Also, check the shaft coupling or water slinger to make sure that neither one is being pulled up against the bottom of the driver base. Now, lower the impellers (turn the adjusting nut clockwise) by around 60% of the total lateral. Line-up one of the holes in the adjusting nut with the nearest hole in the driver coupling. Insert the capscrew in the hole and tighten it. **For pump setting over 500 ft.,** consult factory for special instruction.

PRE-START PROCEDURE

Consult the applicable manufacturer's instructions for detailed information for the prime mover (electric motor, engine or steam turbine), coupling, driveshaft, gear driver. Prior to startup, check the following.

1. Confirm that the following procedures described in the "Installing the Drivers" sections have been performed:

A. Wiring of Driver.
B. Driver must rotate counterclockwise (CCW) when viewed from above.

WARNING ***Do not check motor rotation unless motor is bolted to pump and drive coupling is removed.***

WARNING ***Be sure to install the coupling guards around all exposed shafts and couplings before start up of the pump. Failure to comply may result in sever personnel injury or death.***

C. Check alignment of pump and driver.

D. Impeller adjustment has been made.

2. For open lineshaft pump, make sure the stuffing box bleed line is connected (if applicable). For enclosed lineshaft pump, make sure the oil lubrication piping is connected and oil reservoir filled with the recommended oil.

3. For open lineshaft pump, when water level is exceeding 50 feet, pre-lubrication is necessary. If it is equipped with a prelube system supplied from a pressurized header, open the supply valve and allow the prelube water to flow for 15 seconds plus 15 seconds per 100 ft of pump setting. If it is equipped with a tank type prelube system, open the valve between the prelube tank and the pump and allow approximately half of the water in the tank to run into the pump before starting the pump. The prelube valve should remain open during the start up.

Column Required Pre-Lub Size Tank Capacity Pipe & (Ø in) (liters)

Column Dia. (in)	Tank Capacity per 40 m (liters)
3" - 4 "	40
5" - 6"	100
8" - 10"	190

4. For oil lubricated pump, clean and fill the lubricator tank with recommended oil. SAE 30 series is a recommended one. For higher temperature fluid applications, (e.a. > 25 ^{0}C), refer to the factory. Manually open the lubricator valve and allow oil to run into the shaft enclosing tube for at least 20 minutes for each 100 ft. of setting prior to start up. Then, adjust the lubricator for the proper drops per minutes according to the following table:

Shaft Size Basic drops Additional drops (in.) per minute (extra for per minute per 40 ft. Setting)

Shaft Dia.	Drop per minute	Add drop per 40 m
up tu 1 3/16"	5	2
11/2" - 1 11/16"	7	3
1 15/16" - 2 3/16"	10	4

On the system equipped with a solenoid operated lubricator valve that cannot be energized independently, it will be necessary to remove the valve stem to allow the oil to flow into the tube. If the start up is delayed or the pump has been shut down for over 150 hours, the lubrication procedure must be repeated just prior to actual start up.

5. Open the air release system isolation valve. Adjusting the air release system throttling device so that is partially open, It should not be closed or fully open.

NOTE: Not exhausting the air or exhausting it too fast can damage the pump.

6. All connections to driver and starting device must match wiring diagram. Voltage, phase and frequency on motor nameplate must agree with line current.

7. Rotate shaft manually to ensure impellers are not binding.

8. Verify that driver bearings are properly lubricated and check oil level in housing.

9. Inspect discharge piping connection, valves and pressure gauges for proper operation.

PUMP STARTUP

1. Partially close the valve in the discharge line.

2. Start the pump. If any abnormal noises, jerking or vibration is noted, stop the pump immediately, determine the cause of the abnormalities and correct them.

3. After the pump is operating at full speed, slowly open discharge valve. If driver overheats or there is excessive vibration, stop the pump, determine the causes and correct them.

4. If the air release valve is manually operated, close it.

5. For open lineshaft pumps, with the pump in operation, there should be some leakage at the stuffing box packing. The correct leakage rate is approximately one drop per second. Check the temperature of the leakage as well as the discharge head. If the pump runs hot and the leakage begins to choke off, stop the pump and allow it to cool down. A few light taps with a hammer on the gland will upset the packing sufficiently to resume leakage. After pump has cooled, restart pump and follow preceding procedure. Run pump 15 minutes, check leakage, if it exceeds two drops per second, adjust packing as described in “Packing Adjustment and Replacement”.

6. For enclosed line shaft pumps, adjust the lubricator valve for the proper flow rate of the lubrication oil.

Preventive Maintenance

Preventive maintenance includes periodic inspection of oil level in the oil reservoir (for pump with oil lub column), re-lubrication of electric motors, gear drives and prime mover. Systematic inspection of the pump and its components shall be made at regular intervals. The frequency required depends upon the operating conditions of the pump and its environment. See Preventive Maintenance Procedures. Consult the applicable manufacturer's instructions for detailed information on maintenance for the prime mover, driveshaft, electric motors and gear drives. Any deviation in performance or operations from what is expected can be traced to some specific cause. Variances from initial performance will indicate changing system conditions, wear or impending breakdown of the unit.

WARNING ***Before initiating maintenance procedures disconnect all power sources to the equipment and accessories and completely discharge all parts and accessories which retain electric charge. Failure to comply may result in severe personnel injury or death.***

PACKING ADJUSTMENT AND REPLACEMENT

Pumps equipped with packing, shall be adjusted whenever the leakage rate exceeds two drops per second. If there is no leakage or the stuffing box overheats, do not back off gland nuts while the pump is running. This will allow the entire set of rings to move away from the bottom of the box, without relieving pressure of the packing on the shaft. Stop the pump and allow packing to cool then restart the pump.

WARNING ***Be sure to reinstall the coupling guard before restarting the pump.***

It may be necessary to repeat this procedure several times before proper amount of liquid comes through to efficiently prevent overheating. If leakage is excessive, adjust the stuffing box as follows:

1. With the pump in operation, tighten the gland nuts one-quarter turn for each adjustment. Allow packing to equalize against the increased pressure and leakage to gradually decrease to a steady rate, before making another adjustment.

2. With the pump shut down and when packing has been compressed to the point that the gland is about to contact the upper face of stuffing box, remove the split gland, add one extra packing ring and readjust. If this fails to reduce leakage to two drops per second, remove all packing rings and replace with new rings.

CAUTION ***Do not over tighten the stuffing box. Excessive pressure can wear out packing prematurely and seriously damage the shaft.***

3. Remove the packing with the aid of a packing hook. If a lantern ring is provided, remove it by inserting a wire hook in the slots of the ring and pull it from the packing box. Thoroughly clean the stuffing box of all foreign matter.

4. If the replacement packing is in the form of a continuous coil or rope, it must be cut into rings before installing. Tightly wrap one end of the packing material around the top shaft like one coil spring, and cut through the coil with a sharp knife.
For repacking sequence, refer to "Stuffing Box Installation".

SEASONAL SHUTDOWN

WARNING ***Manually rotate shaft several times prior to restarting pump which has been down.***

1. For oil lubricated pumps that are shut down for an extended period of time, it is suggested that the pump be operated for at least 15 minutes every two weeks with oil feed wide open 2 hours before and during startup in order to maintain a film of oil on the shafting and shaft bearings.

2. For product (or water) lubricated pump, if the pump is to be shut down for an extended period of time, operate it for at least 15 minutes with adequate pre-lubrication every two weeks.

3. Before resuming normal operations, oil should be changed on drivers, right angle gear and lubricating oil system. After 15 minutes of operation adjust lateral.

WARRANTY

Limits of use

Maximum allowable water temperature	: 50C°
Maximum sand amount	: 50 g/m³
Maximum starting count	: related to motor
Maximum operating time on closed-valve	: 5 minutes
Maximum permissible potential change	: ±10% of nominal voltage
Liquid to be pumped	: Clean water

Applications violating the above limitations, unless clearly stated in the sale contract, are not taken into warranty range; none of the warranty conditions is valid.

For applications out of these limitations, customer has to warn directly or by means of agent in offer grade and in order grade different applications must be stated clearly and signed in the contract.

Warranty

CAUTION Do not forget to Request your completely filled warranty certificate. The end-user must present this Warrant Certificate together with the product invoice upon request

Warranty only applies to officially and accepted claims breakdowns, it does not cover any defect, malfunction, etc. resulting from misuse, abuse, lack of normal care, corrosion, freezing, modification, unauthorized or improper repair or installation, accident, acts of nature or any other application done contrary to this Layne Bowler Installation, Operation and Maintenance Manual.

Warranty service must be performed by an authorized service. If the End-user is unable to locate or obtain warranty service from any Authorized Services or Representatives, he should call the factory and ask for the After Sales Department which will then arrange him a special warranty service.

If any Layne Bowler part is repaired or replaced, the new part shall be warranted for only the remainder of the original warranty period.

Warranty Claims should be well explained and accompanied with photos and transferred to Layne Bowler, within a maximum of one week (5 working days) including the day of breakdown. Otherwise this breakdown will be considered immediately out of warranty.

No claim may be made against Layne Bowler products based on any oral warranty.

The end-user should take all necessary precaution against any breakdown or failure in Layne Bowler Product. Lost profits, delay, or any other loss due to unavailability of Layne Bowler products during failure or reparation is out of Layne Bowler Pump Company Inc. responsibility.

PUMP AND WELL INFORMATIONS
(Absolutely fill and complet these information)

1. **Pump Information**

Pump serial number	:
Type	:
Stage	:
Date	:
Capacity on operating point	:
Dynamic water level	:
Manometric head read from pressure gauge	:
Motor type	:
Power	:
Voltage	:
Nominal current	:
Starting type	:
Motor current on operating point	:
Discharge pipe dia.	:
Column pipe dia.	:
Length of one column pipe	:
Number of column pipe	:
Total length column pipe	:

2. **Well Information**

Date "when well was digged"	:
Total depth	:
Inner dia. of first stage	:
Inner dia. of second stage	:
Inner dia. of third stage	:
From the mouth of the well ;	
Depth of first filter	:
Depth of second filter pipe	:
Depth of third filter pipe	:
Depth of fourth filter pipe	:
Depth of first filter pipe	:
Capacity	:
Dynamic water level	:
Static water level	:
Sand amount	:

TROUBLE SHOOTING

PROBLEM	CAUSE	SOLTION
1. Pump does not start	A. Electrical circuit open or not completed B. Improper lateral adjustment. Impeller on bottom. C. Low voltage supplied to electric driver. D. Defective motor.	Check circuit and correct. Reset impeller adjustment, Check whether driver wiring is correct and receives full voltage. Consult factory.
2. No liquid delivered	A. Discharge valve closed B. Speed is too low C. Wrong rotation D. Obstruction in liquid passage E. Water level in the well is below 1st stage impeller. F. Static lift too high. G. Field head requirement greater than design head. H. Damaged bowl assembly; Broken or disconnected shaft I. Driver with reduced voltage, or reduced current starting does not come up to speed.	Be sure the discharge valve is in full open position. Check if driver is directly across the line and receiving full voltage. Check for CCW rotation when viewed from above. Check engagement of motor coupling. Pull pump, inspect suction strainer, impeller and bowls. Increase pump setting by adding column. Check the dynamic water level in well. Consult factory for adding stages or increase impeller diam. Check system friction loss. Increase discharge piping size. Consult factory for adding stages or increase impeller diameter Pull pump and repair all damaged components. Check RPM, voltage and amp's.
3. Not enough liquid	A. Same as items 2-A thru 2-G B. Cavitation C. Impellers adjusted too high. D. Air or gas in the water E. Excessive pump wear.	Same as items 2-A thru 2-G. Insufficient NPSH available. Consider to low the bowl assembly by adding column. See impeller adhustment page. If successive starts and stops does not remedy, low pump if possible, or close discharge valve to maintain well pumping level at a lower capacity. Pull pump and repair as required.
4. Not enough pressure	See not enough liquid.	See not enough liquid.

5. Pump works for a while and quits.	A. Excessive horsepower required. B. Pumping higher viscosity or specific gravity liquid than designed for. C. Mechanical failure of critical parts. D. Suction strainer clogged E. Misalignment F. Break suction	Use larger driver. Consult factory. Test liquid for viscosity and specific gravity. Check bearings and impellers for damage. Any irregularities in these parts will cause a drag on the shaft. Pull pump and clean the strainer. Realign pump and driver Check dynamic water level in the well. Lower bowl assembly by adding column.
6. Pump takes too much power	A. Damaged impeller B. Foreign object lodged between impeller and bowl. C. Specific gravity higher than pump designed for. D. Viscosity too high, partial freezing of pumpage. E. Defective bearing F. Packing is too tight.	Inspect, replace if damaged. Remove object as required. Test liquid for viscosity and specific gravity. Check for both. They can cause drag on impeller. Replace bearing, check shaft or shaft sleeve for scoring. Release gland pressure. Retighten. Keep leakage flowing. If no leakage, check packing, sleeve or shaft.
7. Pump is too noisy	A. Cavitation B. Bent shaft C. Rotating parts binding, loose or broken. D. Bearings are worn out. E. Resonance	Same as Item 3-B. Straighten as required for runout limits. Replace as required. Replace bearings. Check piping strain, consult factory.
8. Excessive vibrations	A. Coupling misalignment, bent impeller unbalance, worn bearings, cavitation, piping strain and/or resonance. B. Motor or gear driveshaft end play maladjustment C. Bent shaft D. Crooked well.	Determine cause utilizing shaft vibration frequency analyzer and/or pump disassemble. Complex problem may require factory service assistance. See Installation Driver. Straighten as required for runout limits. Survey the well and consult factory.
9. Pump leaks excessively	A. Defective packing B. Wrong type of packing	Replace worn packing. Replace packing not properly installed or run-in. Replace improper packing with correct grade for liquid being pumped.

10. Stuffing box is overheating.	A. Packing is too tight. B. Packing is not lubricated C. Wrong grade of packing D. Stuffing box improperly packe	See item 6-F. Release gland pressure and replace all packing if burnt or damaged. Re-grease packing as required. Consult factory. Repack stuffing box.
11. Packing wears too fast	A. Shaft or shaft sleeve worn. B. Insufficient or no lubrication. C. Improperly packed. D. Wrong grade of packing.	Pull pump and remachine, or replace shaft and/or sleeve. Repack and make sure packing is loose enough to allow some leakage. Repack properly, make sure all old packing is removed and stuffing box is clean. Consult factory.